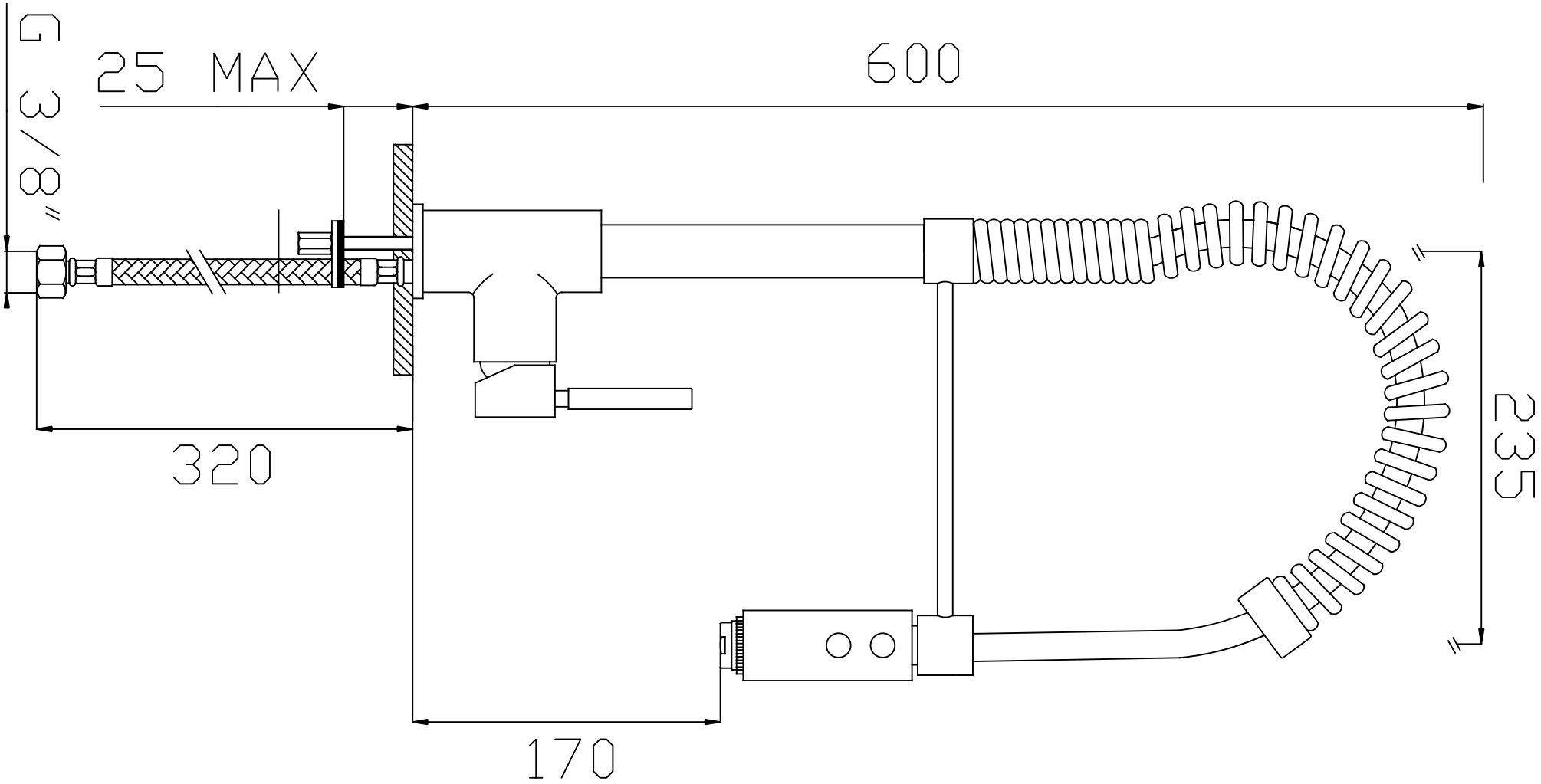
5 3/8"
25 MAX
600
320
170
235