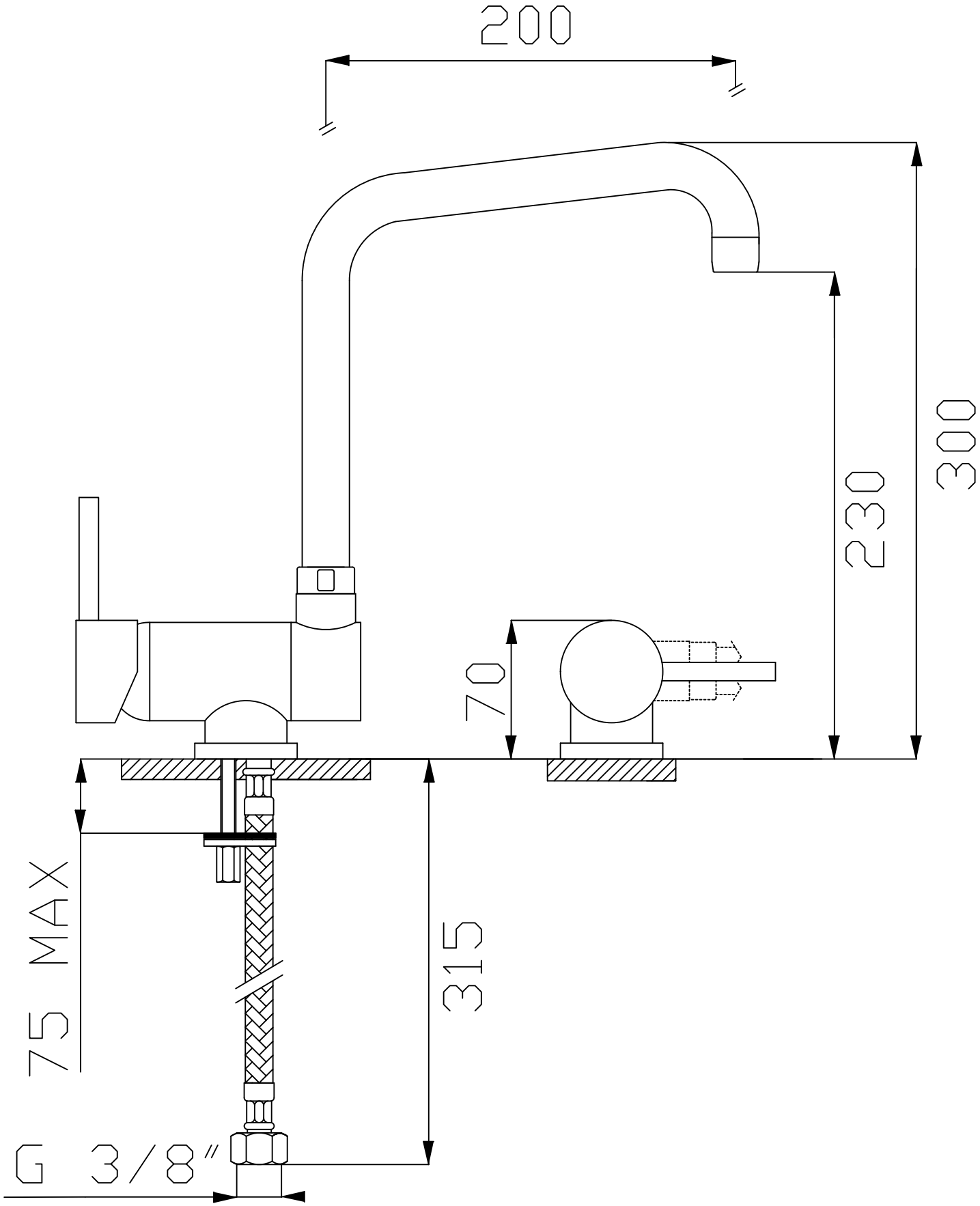
200
300
230
70
315
75 MAX
G 3/8"